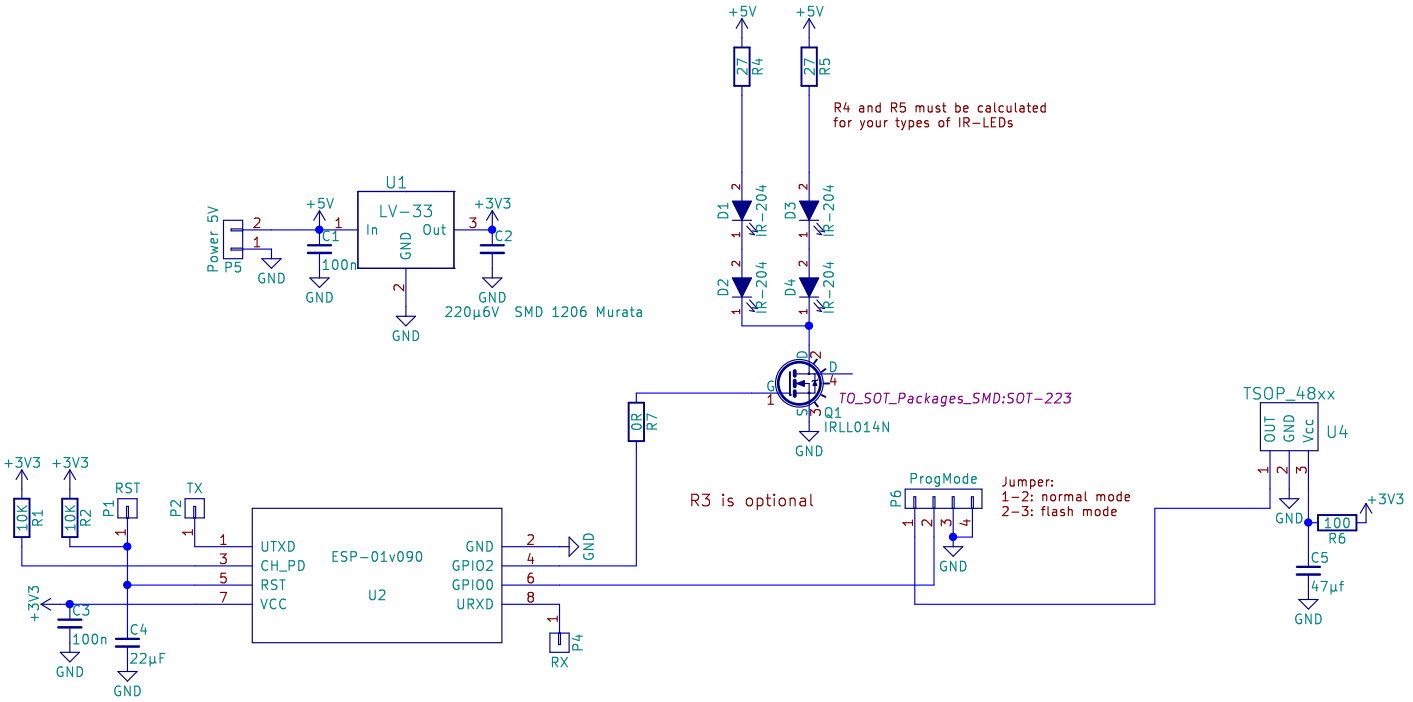

IR Transmitter / Receiver V2.1

Sheet: /
File: IRTXRX.sch

Title: IRTXRX by TG 2017

Size: A4	Date:	**Rev:**
KiCad E.D.A. kicad 4.0.4-stable		Id: 1/1